GUIDE UNITS AND SLIDES

TYPES

The range of guide units and slides is very extensive.
Guides are grouped into families.

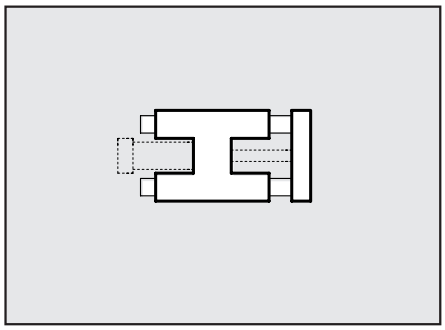

Guide units to couple with standard cylinders
These are separate units to which an ISO 6432 or ISO 6431 cylinder is attached.

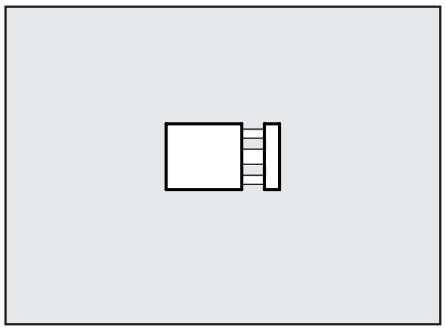

Pneumatic single piston cylinders with supports at the end of the piston rod.
The common factor in all the various configurations is that, as well the calibrated hole for the piston in the cylinder body or front head, there are other slots housing bushes or guide bearings for additional piston rods.

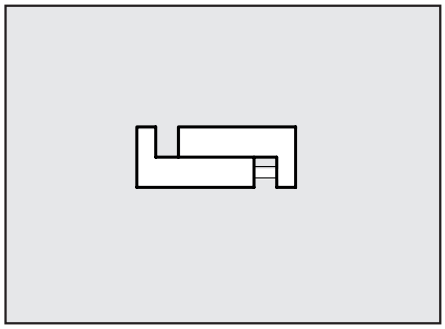

Guides with pneumatic actuator
The main part of this actuators is the guiding section which determines the shape, applications, loads, maximum strokes and cost. The pneumatic part is housed in one of the bodies of the unit or it comes as a complete cylinder housed inside the guide.

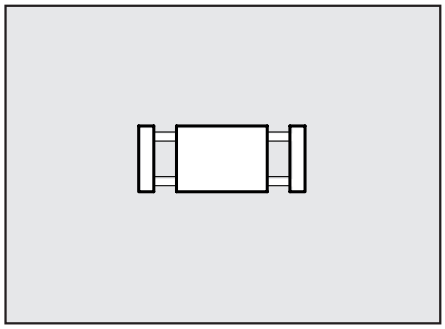

Twin pneumatic cylinder
The jacket has two calibrated holes for housing two pistons and rods side by side. There are versions with a single piston rod, through piston rod and different power supplies depending on whether you wish to fix the jacket or the flanges to the ends of the piston rod.

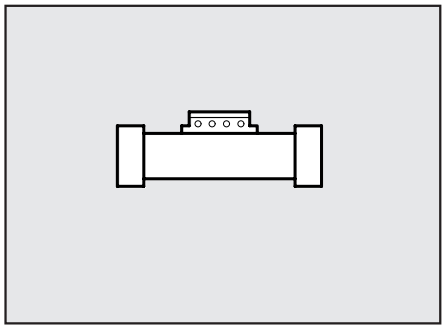

Rodless cylinders
In these cylinders the piston rod is integral with a carriage on the outside of the jacket, so there is no piston rod. We offer versions in which the jacket is open, with a C-shaped section, and piston and carriage linked mechanically. There are other versions – that we do not make - in which the jacket is closed and there is no contact with the piston which is moved by magnetic force.

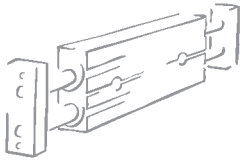

GUIDE UNITS TO COUPLE WITH STANDARD CYLINDERS

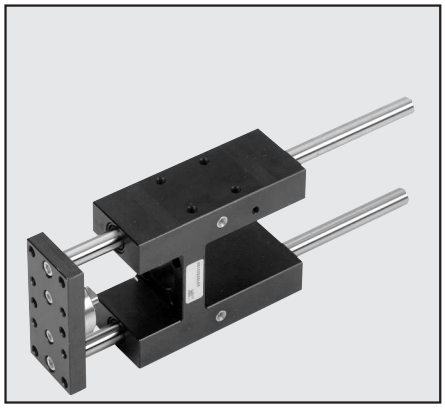

• Series S1
GDS, GDH and GDM for ISO 6432 minicylinders and ISO 6431 cylinders.
The GDS series, which has a C-shaped body, is for lesser loads. Series GDH and GDM have an H-shaped body. GDH guide units guide piston rod with ball re-circulation bushes and are more suitable for high speed.
There guides for minicylinders with bores 12-25 mm (see catalogue page 1.1/15) and guides for cylinders with bore 32-100 mm (see catalogue page 1.1/75).

CYLINDERS WITH PISTON ROD SUPPORT SYSTEM

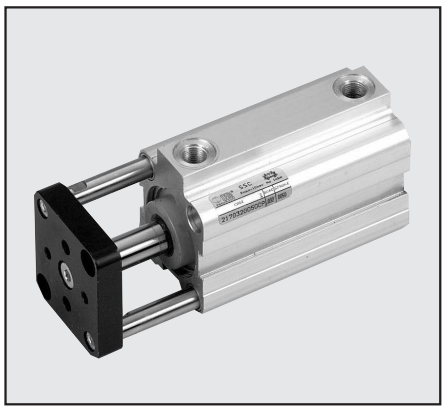

• Series S2
Short-stroke anti-rotation cylinders.
Bores available Ø 12 –100.
See catalogue pages 1.1/27 - 1.1/28

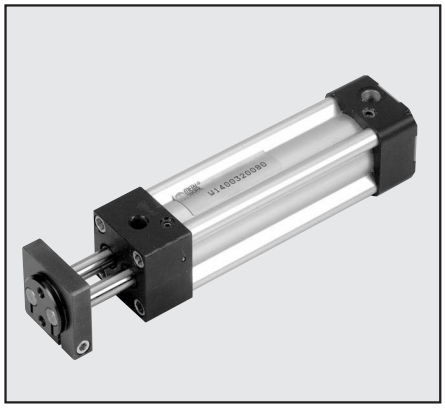

• Series S3
Twin-rod cylinders
These are cylinders with axial movement and ISO 6431 ports.
Bores available Ø 32 –100.
See catalogue page 1.1/86.

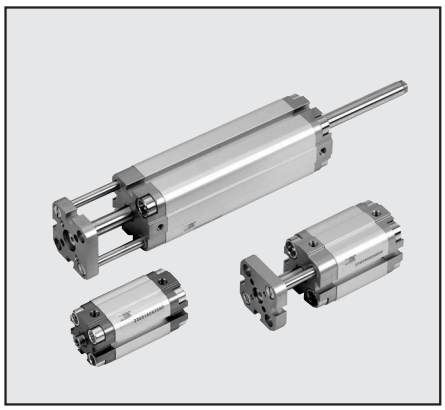

• Series S4
Compact anti-rotation cylinders
These are similar in design to the short-stroke anti-rotation cylinders. They are slightly sturdier since the guide rod diameter is greater in some sizes and the top plate is fixed on better.
There are bores Ø 12 –100 with dimensions to UNITOP NFE 49-004 1 and, and bores Ø 32-100 with fixing dimensions as for ISO 6431 cylinders.
See catalogue pages 1.1/38 - 1.1/39.

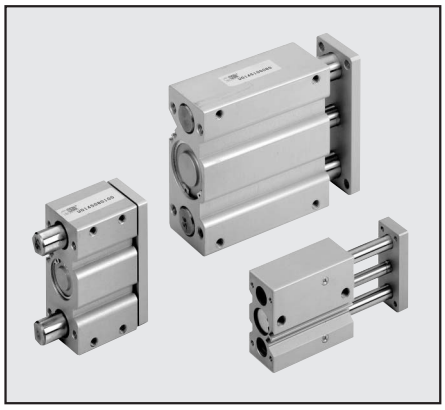

• Series S6
Compact guided cylinders
These cylinders have a high load capacity exceeding that of short-stroke anti-rotation cylinders and compact anti-rotation cylinders.
All come complete with magnets for magnetic sensors.
Bores available Ø 16-100.
See catalogue page 1.1/111.

GUIDES WITH PNEUMATIC ACTUATOR

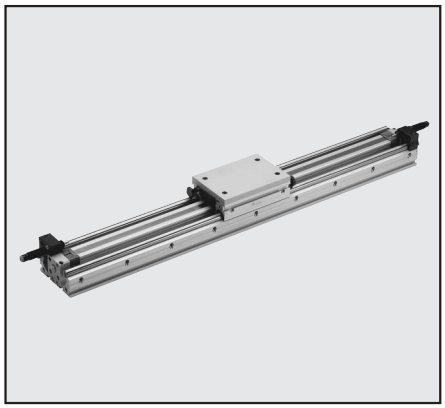

• Series S7
Heavy-duty guides
These are used with long strokes. The slide is guided by ball re-circulation shoes that run on hardened and tempered steel rods fixed all along an aluminium frame, which houses the pneumatic cylinder.
The size available can take a Ø 32 ISO 6431 cylinder or a Ø 25 rodless cylinder.
At the end of the stroke there are counter-blocks with a finely adjustable mechanical stop, hydraulic shock absorber and proximity sensor.
Optionals:
• Safety buffer
• Intermediate sensors
• Pneumatically-operated intermediate stops
• Interface plates
The guides can also house cog belt or ball screw systems, not described in this catalogue.

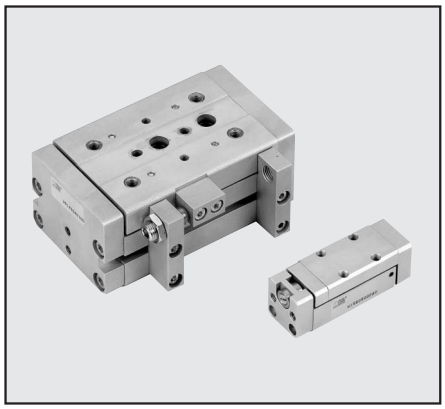

• Series S8
Compact precision slide
The slide is guides by ball re-circulation shoes that run on steel guides fixed directly onto the cylinder body. The slide runs along the side of the cylinder, which makes the assembly particularly compact and sturdy.
A sensor magnet is provided.
Slides with cylinder bores Ø 8-40.
Optionals:
• Adjustable mechanical stop
• Pneumatic cushioning
• Hydraulic shock absorber

TWIN PNEUMATIC CYLINDER

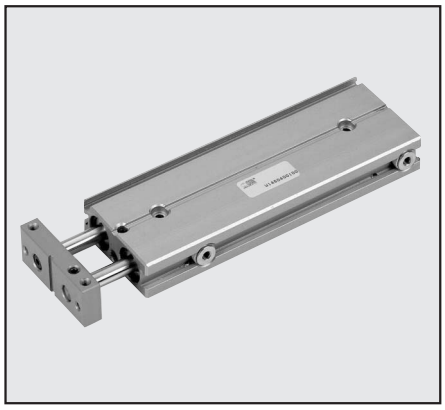

• Series S10
Twin cylinder
The main feature of this cylinder is that it is extra flat.
There are sensor slots and air ports in one side.
Bores Ø 12-30.
There are two models, with bronze bushes or with ball re-circulation bearings for high speeds.

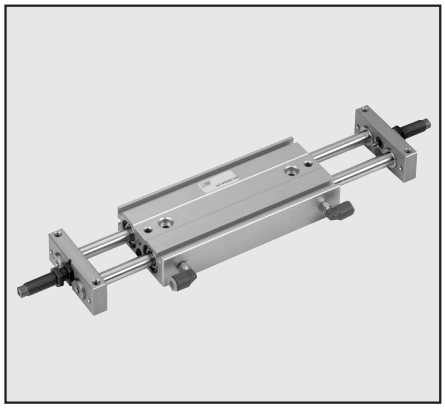

• Series S11
Twin cylinder guide unit
The main feature of this guide unit is that it is extra flat.
It is similar to the twin cylinder, but has through rods and two flanges at the ends. Bores Ø 12-30.
Two hydraulic shock absorbers can be mounted optionally.
There are two models, with bronze bushes or with ball re-circulation bearings for high speeds.

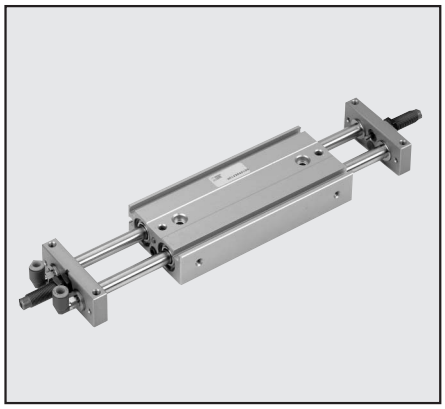

• Series S12
Twin cylinder slide
This is similar to the twin cylinder guide unit but here it is the central body that moves while the two end flanges are fixed. The air ports are at the ends of the piston rods.
Two hydraulic shock absorbers can be mounted optionally.
Bores Ø 12-30.
There are two models, with bronze bushes or with ball re-circulation bearings for high speeds.

RODLESS CYLINDER

• Series S13
Standard rodless cylinder
This is the most compact guide unit available. In all the above models the axial length is equal to a basic value plus double the stroke, but here it is equal to the basic value plus the stroke, so slightly less than half the length of the other models. The other two dimensions are also the basic values, comparable only with solutions adopting piston rod supporting system. There are, however, limitations regarding radial loads and applicable moments.
Bores Ø 16-25-32-40-63.
See catalogue page 1.1/93.

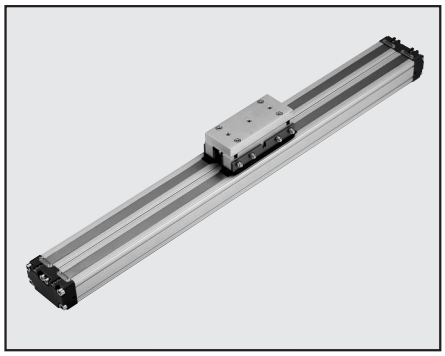

• Series S14
Rodless twin cylinders
These have twice the axial force of the standard cylinder. The radial load capacity and torque resistance are also much greater.
Bores Ø 16-32.
See catalogue page 1.1/101.

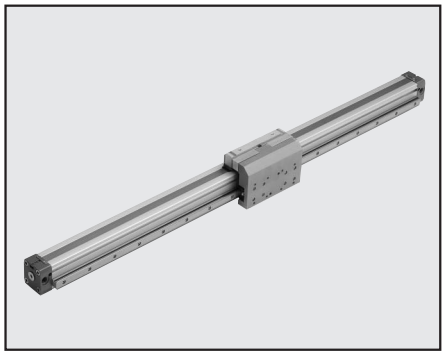

• Series S15
Rodless cylinder with ball recirculating guide
For improved load capacity with respect to standard rodless cylinders, this version has a steel guide on one side of the jacket and the re-circulation shoes fixed onto the carriage.
See catalogue page 1.1/103.

COMPARATIVE CHART – GUIDE UNITS AND SLIDES

The lines plotted on the graph below show the following for each series of guide or slide:
• Maximum radial load F
• Stroke S
This allows you to determine the most appropriate series to meet your requirements. For instance, if you want a slide able to withstand radial loads greater than 100 N and with a stroke greater than 100 mm, you can find it in series S7, S13, S14 and S15.

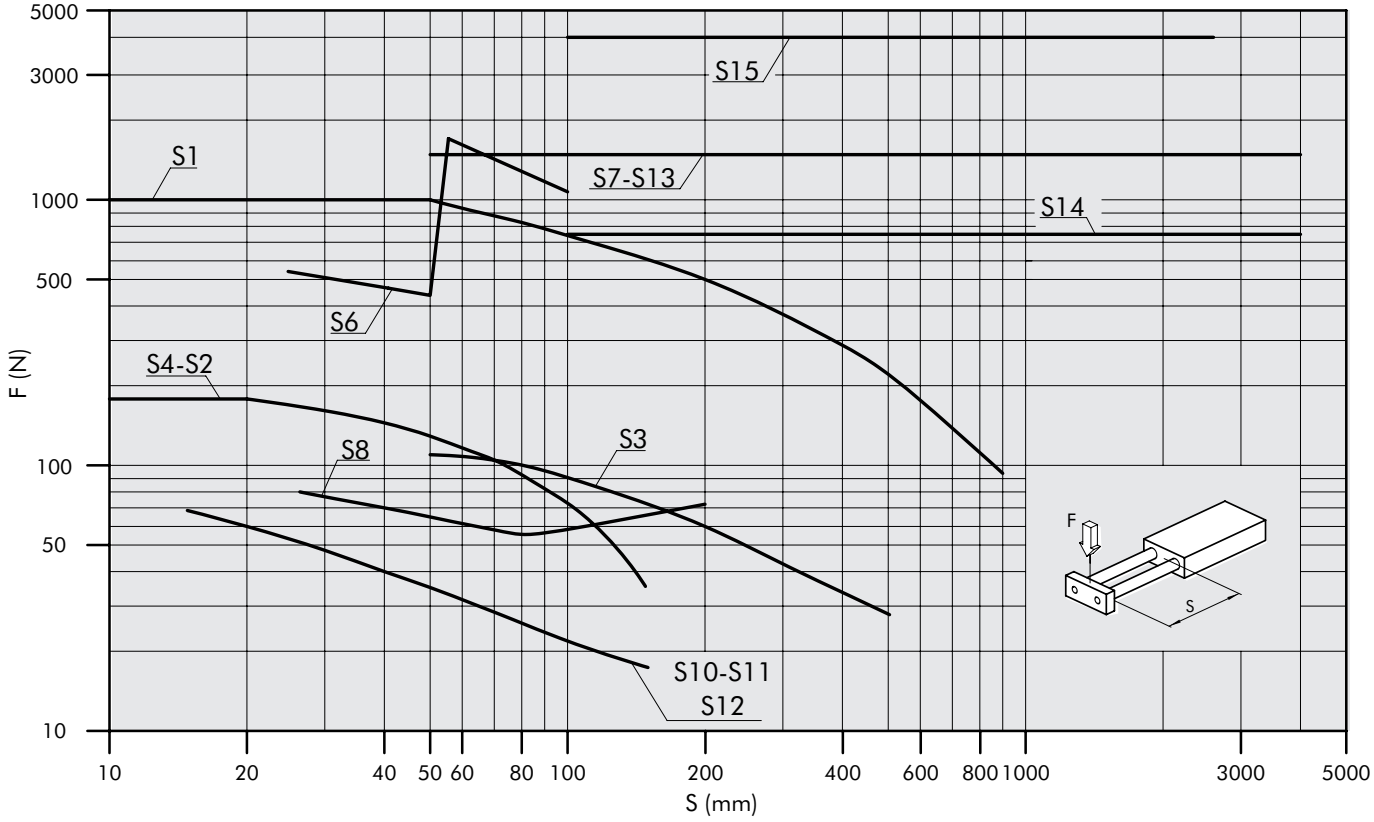

Admitted loads for each guide unit are shown in the catalogue.
If the load is not aligned with the moving plate, it is possible to determine the equivalent load or stroke with a good approximation.

LOAD CONDITIONS

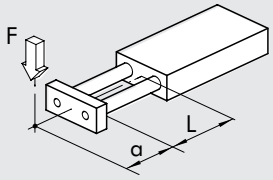

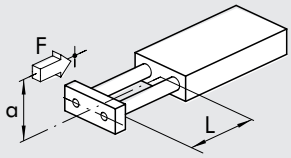

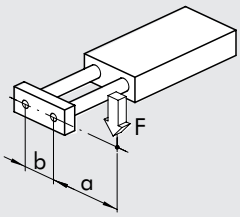

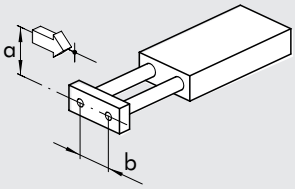

LOAD OR STROKE EQUIVALENCE

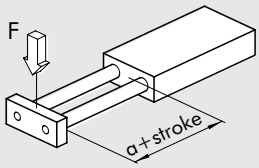

TO CHECK
THE ADMISSIBLE
LOAD

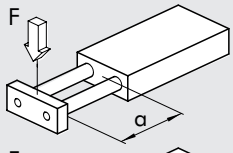

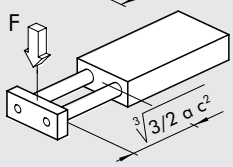
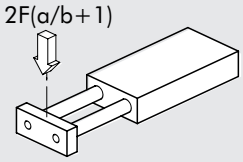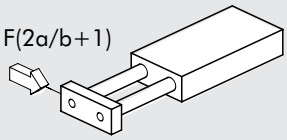
TO CHECK
THE ARROW